2000 02 000

Power Supply to Vacuum Gauge

User Manual

rev. 01

Product Identification
In all communications with ALFAVAC s.r.o., please specify the information on the product nameplate.

Intended Use
This power supply is intended to use with VGPR vacuum gauges.

Safety
Personnel Qualifications

All work described in this document may only be carried out by persons who have suitable technical training.

General Safety Instructions
• Adhere to the applicable regulations and take the necessary precautions.
• Adhere to the applicable regulations and take the necessary precautions for all work you are going to do and consider the safety instructions in this document.

Communicate the safety instructions to all other users.

DANGER: ELECTRIC SHOCK
Do not open the power supply. Do not introduce any objects into the power supply. Keep away from fire and water.

WARNING: HAZARDOUS VOLTAGES
Hazardous voltages and components storing a very substantial amount of energy are present in this power supply during normal operating conditions. However, these are inaccessible. Improper handling may result in an electric shock or serious burns!

Compliance with the relevant national regulations must be ensured.
Before operation is started the following conditions must be ensured:

- Power supply and mains cables must be sufficiently fused.
- The non-fused protective earth connection must be connected to the earth terminal (Protection Class I)
- All output wires must be rated for the power supply output current and must be connected with the correct polarity.
- Sufficient cooling must be ensured.

Liability and Warranty
ALFAVAC s.r.o. assumes no liability and the warranty becomes null and void if the end-user or third parties:
• disregard the information in this document
• use the product in a non-conforming manner
• make any kind of interventions (modifications, alterations, etc.) on the product.

Technical Data

Output voltage	12 VDC
Max. output current	1.25 A
Output power	15 W
Input voltage	230 VAC, 50 Hz
Isolation voltage	2.5 kV AC
Conversion efficiency	85%
Safety	Over current protection, short circuit auto-recovery
Electrical connection (mains)	IEC C14
Electrical connection (gauge side)	D-SUB 9 pin male, VGPR compatible
Operating temperature range	-40 to 85°C
Storage temperature range	-40 to 105°C
Max. relative humidity	95%
Protection class	IP 40
Certifications	CE, RoHS, REACH

Electrical connection on gauge side

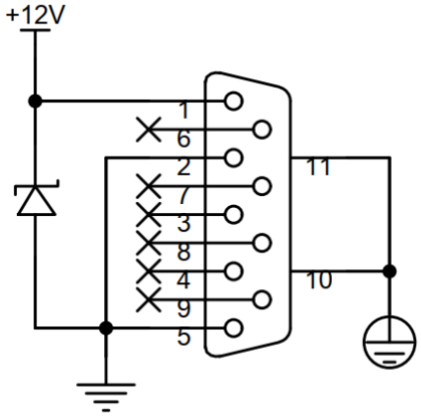

EMC characteristics

EMI
Conducted disturbance EN55011(CISPR11) / EN55032(CISPR32, CLASS B
Radiated disturbance EN55011(CISPR11) / EN55032(CISPR32, CLASS B

EMS
Electrostatic discharge IEC/EN61000-4-2
Radiated immunity IEC/EN61000-4-3
Immunity to pulses IEC/EN61000-4-4
Immunity to surges IEC/EN61000-4-5
Immunity to conducted disturbances IEC/EN61000-4-6
Voltage dips, sags and short interruptions
Immunity to voltage IEC/EN61000-4-11

In case of severe contamination or a malfunction, please contact ALFAVAC s.r.o. for reparation.

Product Compliance